Results

Tyler Ward — 1st Attempt

90%

90
Out of 100 points

42:51
Time for this attempt

This assessment has unlimited attempts. Take Now

Attempt history

Results	Points	Score	(Latest score is kept)
Attempt 1	90 of 100	90%	(Latest score)

Your Answers:

1 10 / 10 points

Select all the applications below for which a power converter may be used in a battery-only electric vehicle (no combustion engine). Marks will be deducted for incorrect selections.

- [x] Battery interface

- [x] Propulsion motor controller
- [ ] Range extension generator controller
- [x] Mains charging interface

Feedback

Based on answering correctly

Correct

2 10 / 10 points

The power semiconductor switch in a DC/DC converter circuit has a trapezoidal waveform, as shown, where current I_A is 10 A, I_B is 17 A and the duty cycle is 0.4. The switch has an on-state resistance of 0.2 Ω. The forward volts drop can be neglected. Calculate the conduction loss in W.

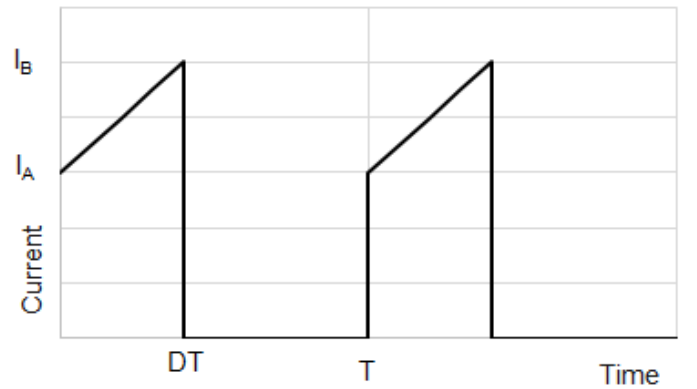

Trapezoidal current waveform - not to scale.

14.9

Feedback

Based on answering correctly

Correct

3 10 / 10 points

The figure shows a capacitor filter on the output of a DC/DC converter. The capacitor current Ic is 4.57 A rms. The capacitor is sufficiently large to keep the output voltage constant, so the load current Iout is 9.60 A DC. Calculate the rms value of the current in the diode.

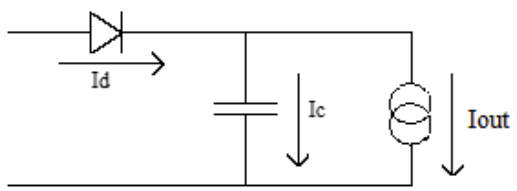

10.6

Feedback

Based on answering correctly

Well done

4 10 / 10 points

An H-bridge is used with UNIPOLAR PWM to create an average DC output voltage of -16 V. The triangle wave period for the PWM generation is 60 µs and the DC voltage is 34 V. Find the time for which the output voltage across the load is non-zero. Give your answer in µs, for example for 60 µs enter 60.00.

✓ 14.1

Feedback

Based on answering correctly

Correct

5 10 / 10 points

Choose the switching sequence for bipolar PWM, including dead time, to give a positive average voltage across the load.

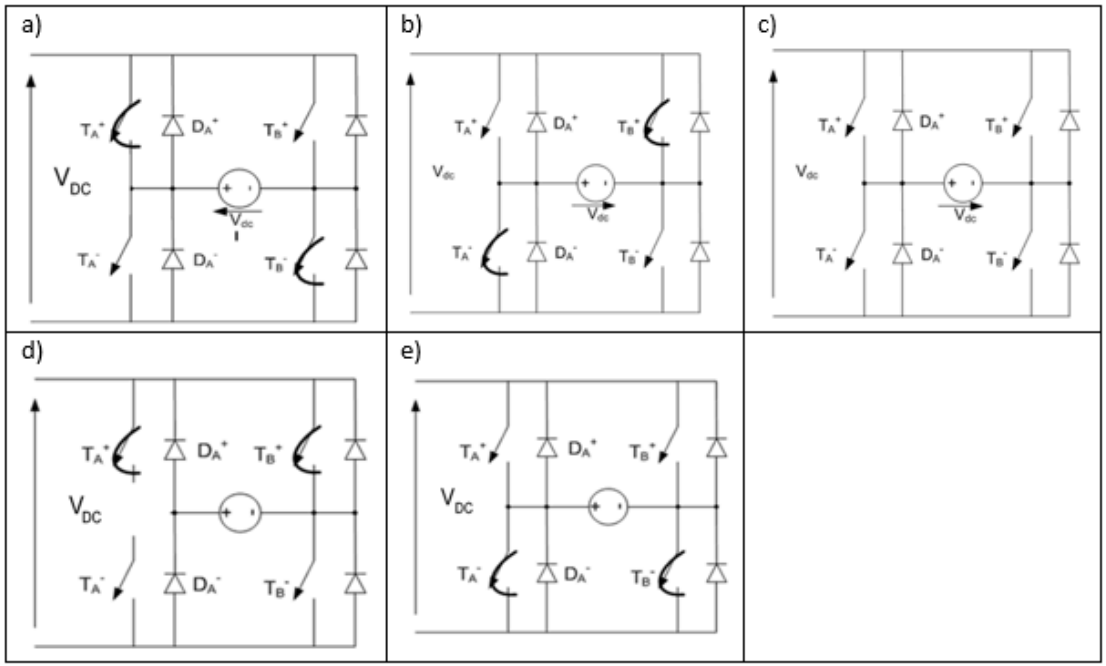

- a,b,a,b...

- a,d,a,d...
- b,e,b,e...
- ✓ a,c,b,c,a...

Feedback

Based on answering correctly

Correct

6 10 / 10 points

The H-bridge inverter below has a 40 V DC link and supplies an RL load connected between points A and B. Match the waveforms to the descriptions. All waveforms show the same time period and time scale. Y axis labels and units have been deliberately omitted, and not all plots show show y=0.

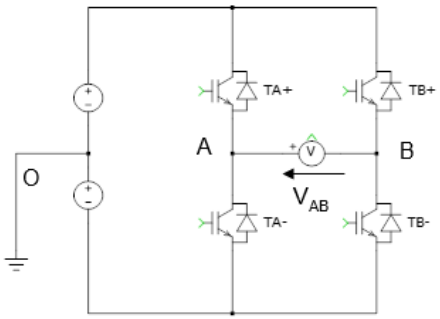

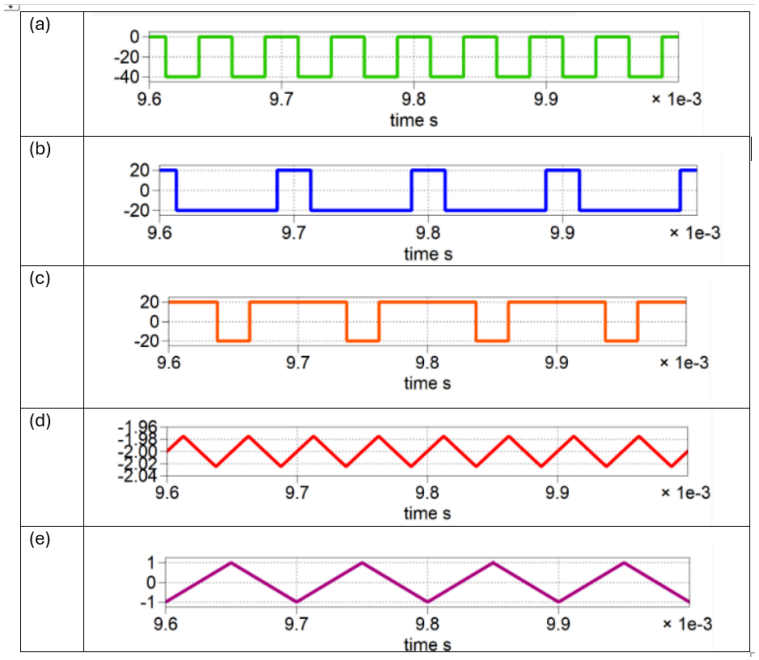

waveform (b)	Leg voltage VAO
waveform (c)	Leg voltage VBO
waveform (e)	Reference-triangle PWM, triangle waveform
waveform (d)	Load current
waveform (a)	Load voltage VAB

Feedback

Based on answering correctly

Correct

7 10 / 10 points

An H-bridge uses a bipolar PWM strategy, with a triangle frequency of 25 kHz. The DC voltage is 73 V and the load inductance is 438 µH. Find the worst case peak-peak load current ripple. Give your answer in units of A.

3.33

Feedback

Based on answering correctly

Correct

8 10 / 10 points

An H-bridge uses a unipolar PWM strategy, and creates an average DC output voltage of 15.51 V from a DC link voltage of 20 V. Calculate the rms ripple voltage at the specified average voltage. Give your answer in units of V.

✓ 8.34

Feedback

Based on answering correctly

Correct

9 0 / 10 points

A Proportional Integral (PI) current controller has a natural frequency of 241 Hz and a damping factor of 0.9. The circuit resistance is 0.3Ω and the inductance is 4.5mH. Find the value of proportional gain K_p in Ω. Assume you can neglect the $K_p s$ term in the denominator of the closed-loop transfer function.

× 10.3

Correct Answer: **11.97**

10 10 / 10 points

For the direction of inductor current shown by the black arrow, and IGBT switches T_A+ and T_B+ turned on, which devices does the current go through? Select all that apply. You will lose marks for selecting the wrong devices. Note the arrow on the switches shows the allowed direction current in the switch.

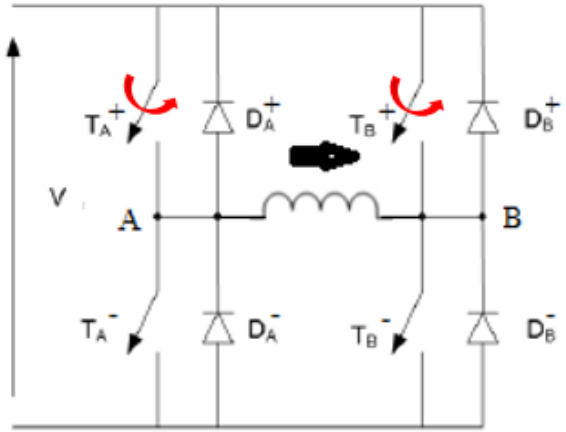

- [x] T_A+
- [ ] T_B+
- [x] D_B+
- [ ] D_A+

Feedback

Based on answering correctly

Correct. Well done